CHAPTER III

EXPERIMENTAL TECHNIQUES

Experimental technique of excitation of band spectra and recording them plays a very important role in the investigations of the spectra of molecules. The probability of obtaining an expected band system depends more or less upon the proper selection of the source to excite it, hence it is essential to know the various spectral sources employed in the production of band spectra. Various types of sources have been used to

excite the molecules to produce their band spectra in emission. They range from open flames to a large varieties of electric discharges. Among the latter electric arcs, electric sparks and a variety of ionic discharges at low pressures are frequently employed.

The flames are known to yield band systems since long. The band spectra of C_2, CH and OH are easily excited in flames which are due to the direct combination of inflammable substances. The analyses of these band spectra have shown that only low-lying electronic states are involved in the transitions. The lowest electronic state is usually ground state of the molecule and the upper state energy rarely exceeds 5 eV. Excitation in flame takes place as a result of the collisions between atoms and molecules. The main disadvantage of the flame source in the production of band spectra is that the substance has to be kept in the gaseous state within the flame.

As the electric arcs produce higher temperatures than flames, they are more suitable for the excitation

of spectra of substances whose melting points are very high. The arcs can impart more energy to the molecules and as a result higher energy levels are excited and consequently more number of band systems appear in arcs than in the flames. The arcs in air have been widely used for excitation of spectra of oxides and halides of metals. By enclosing the arc, it may run in an atmosphere of various gases at various pressures. The current density and the material of the electrodes producing arc are the important factors for the proper excitation of the spectra.

Among the spark sources, the uncondensed discharge is commonly used for the production of band spectra. The disadvantage of the condensed discharge is that it also gives rise to a number of atomic lines.

It is well known for last several years that discharge tubes can be used very conveniently as a source of exciting the molecular spectra. It offers a large scope of varying the conditions of excitation and also steady condition can be maintained for any

desired length of time. Geissler discharge tubes are most suitable for gases or substances having appreciable vapour pressure at low temperatures. The positive column and negative after-glow in such discharge tubes are responsible for most of the emission of light and they are utilized for production of the spectra. In such sources greater number of excited states are possible as compared to arcs and flames.

In the present investigation on the spectra of diatomic molecules (CaI,InI and ZnI) the high frequency oscillatory discharge tube source was found to be most suitable. The techniques adopted in the present study are described below at length.

3.1 THE DISCHARGE TUBE AND VACUUM SYSTEM

The discharge tubes of conventional type were used as the sources. As the melting points of substances under investigation are high, quartz discharge tubes were employed. Tubes having length about 30 cm and internal diameter between 0.3 and 0.6 cm were found

convenient. One end of the tube was provided with a knurling to connect it to a vacuum pump with rubber tubes. The other end of the tube was sealed with glass or quartz window, depending upon the spectral region of investigation. The substance under investigation was kept between the electrodes. The sealing on the joints and fixing of the window were made with Apiezon sealing wax. Two copper foils were wrapped on the tube at the positions shown in fig. 1 which would serve as external electrodes. Continuous evacuation of the discharge tube was done by means of a Cenco-Hyvac pump which can give an ultimate vacuum of 0.1 micron. A tower containing sodium hydroxide pellets and an ice-cooled trap were kept in between the discharge tube and the vacuum pump to minimize the contamination of the pump oil caused by vapours from the discharge tube. Both the ends of the discharge tube were kept water-cooled by keeping water-soaked cotton-wool near them so that the vapour of the substance before reaching the transmitting window or pump line of the evacuating system

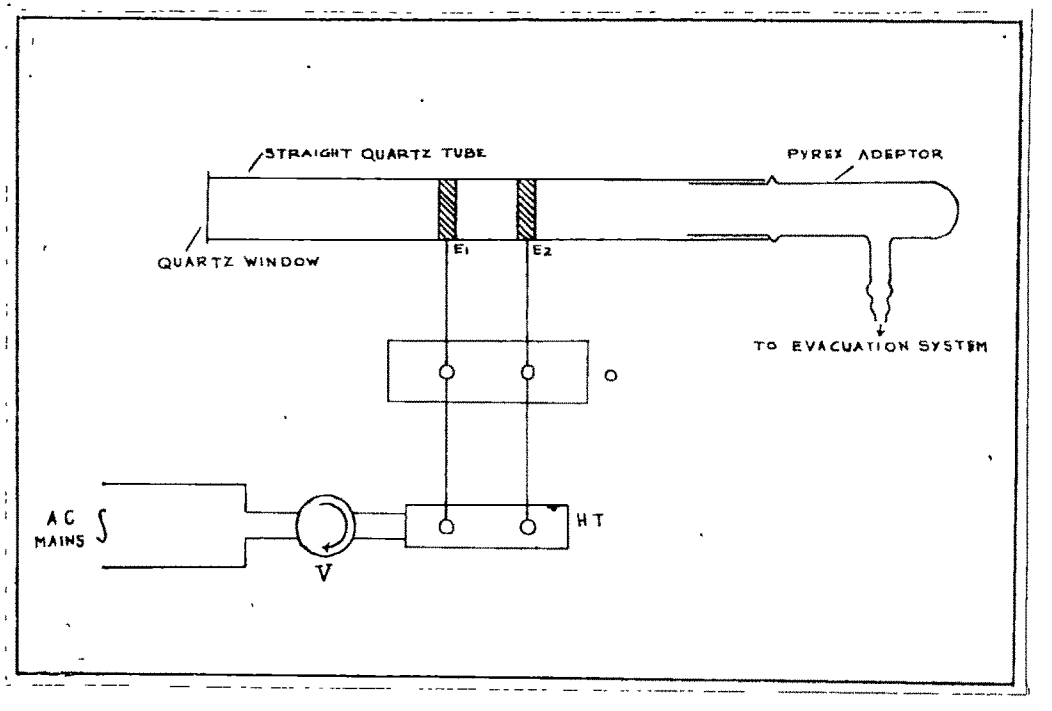

Fig. 1

Block-diagram of the high-frequency oscillator.

get condensed. The length of the connecting rubber tubing in the evacuating system was as small as possible and all joints were made leak proof with araldite. The tube was heated externally with a burner when required to maintain the characteristic colour of the discharge and to maintain the conditions of the discharge throughout the exposure.

3.2 THE HIGH FREQUENCY OSCILLATOR

The high frequency oscillator employed in the present work was fabricated in this laboratory. Fig.1 shows a schematic diagram of the arrangement used. A variac capable of delivering voltages of the order of 220 volts at 4 amperes is used to regulate the voltage applied to a high tension unit (H.T.). The output voltage is applied to the oscillator (O) and the radio frequency voltage is generated which is then fed to the discharge tube by means of external electrodes E_1 and E_2.

(a) THE HIGH TENSION UNIT

The circuit diagram of the power supply for the

oscillating unit is shown in fig. 2. The power transformer T_2 delivers 1500-0-1500 volts in its secondary. This output voltage is then rectified by means of two RCA 866A high vacuum mercury rectifiers. The rectified voltage is filtered using a choke input filter system. A bleeder resistor $R_B(R_1 = R_2 = R_3 = 25000$ ohms) is connected across the output of the high tension.

(b) THE OSCILLATOR

The oscillator is a series fed Hartley Push-pull type and is shown in Fig. 3. The two power tubes (811) are connected in push-pull circuit as shown in Fig. 3. A low voltage transformer T_3 delivers 6.3 volts at 4 amperes current suitable for the filaments of the valves. The oscillations are generated in a tank circuit consisting of a variable transmitting type air condenser and an inductance coil L. To vary the frequency, a series of coils with different number of turns and various diameter were prepared. The maximum output was obtained by the proper matching of the coil

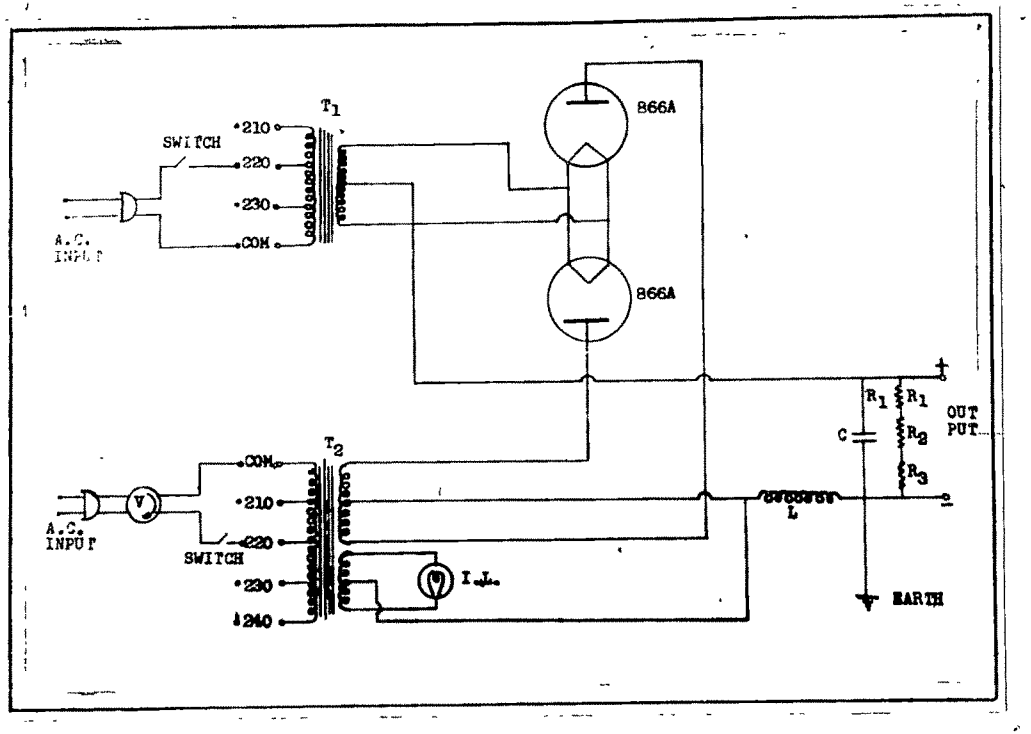

Fig. 2

Circuit diagram of power supply for high-frequency oscillator.

51

with the condenser. Thus the oscillator unit is fabricated to give an output of 125 watts at the frequency range 6.5 - 20 MHz. The oscillator is coupled to the discharge tube at E_1 and E_2 by short leads.

It will be appropriate at this stage to mention some of the salient features of the high frequency discharge for the study of band spectra.

The molecule in the gaseous state may be excited in a low pressure discharge tube with internal electrodes or by electrodeless discharge. The presence of electrodes within the tube causes the "life" of a gaseous ion to be short lived on account of the constant difference of potential between the electrodes. This can be minimized by using the alternating potentials or it may be almost entirely removed by applying the radio frequency oscillations to the discharge tube by means of external electrodes. The external electrodes are connected to a coil which carries a high

52

frequency current generated by thermionic oscillator valve. The high frequency electric field provides enough electron velocity to excite the molecule of a gas at low pressure. Electron velocity, which can be varied by adjusting the field strength and the pressure inside the discharge tube, enables to vary the conditions for proper excitation of higher energy levels of the molecule. In fact, the energy available for excitation is governed by the factors such as the pressure inside the tube, the frequency of the oscillator and the voltage across the electrodes.

3.3 SPECTROGRAPHS

A Hilgar medium quartz spectrograph and a E_2-glass spectrograph having dispersions of about 10 A°/mm at 2650 A° and 16 A°/mm at 4000 A° respectively were used to do the preliminary survey of the different band systems of the molecules under investigation. For the study of vibrational structure spectrograms were taken on a Carl Zeiss two meter plane grating spectrograph in the first and second orders. For the rotational analysis

spectrograms were taken on the same spectrograph in higher orders.

A brief description of the design and working of the two meter plane grating spectrograph is given in the following paragraphs.

The optical principle of this spectrograph is the Ebert mount of the plane grating with mirror optics. A perspective representation of the path of rays is given in Fig. 4. The rays entering through the slit are rendered parallel by the lower part of the concave mirror and are reflected to the grating. After diffraction produced by the reflection grating the dispersed rays strike the upper section of the concave mirror which collects the parallel rays so that spectrum is produced in the plane of the above the grating. The spectrograph has a fine slit which can be narrowed upto nine microns. Attachments are provided for the adjustment of the tilt and height of the spectrum to be recorded.

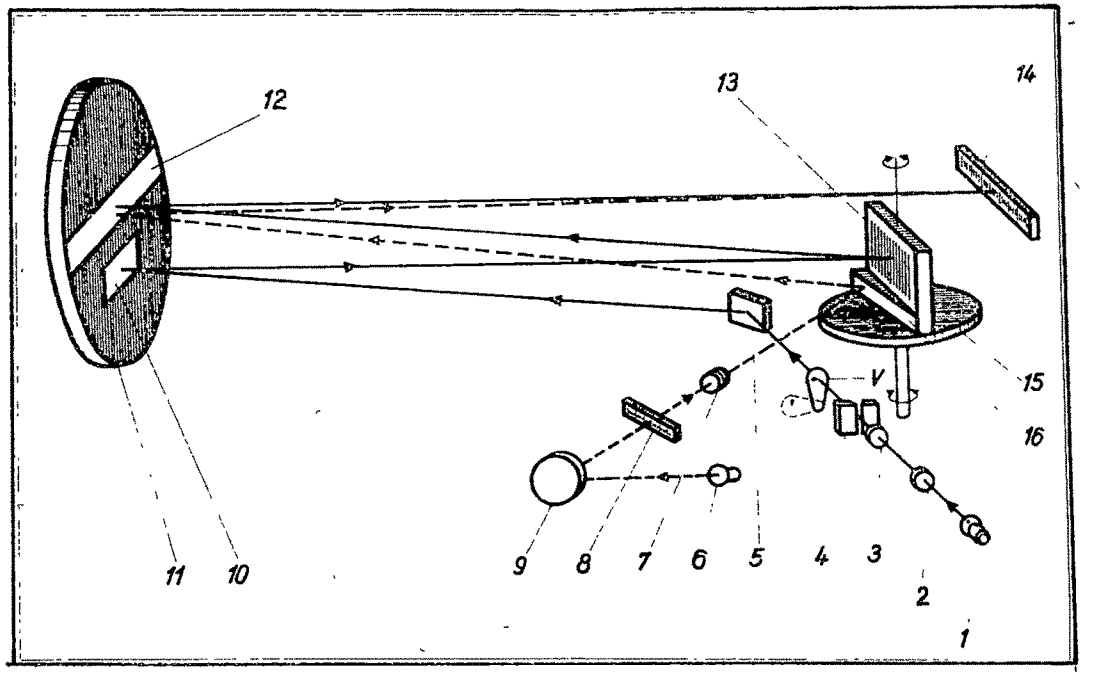

Fig. 4

The path of rays (single-pass beam) in perspective in 2-meter plane grating spectrograph

1. Source
2 and 3. Collimating lenses
4. Slit
5. Deflecting mirror
6. Lamp for scale
7. Lens
8. Scale
9. Deflecting mirror
10. Concave mirror (Lower section)
11. Concave mirror
12. Concave mirror (Upper section)
13. Plane grating
14. Plate holder
15. Grating table
16. Plane mirror

The grating used in the spectrograph has got a saw-tooth profile and concentrates the radiations in a preferred angular direction, the position of which depends upon the rake angle of the grating grooves. This special property of the grating is called the "blaze-property" and the rake angle of the grating grooves as the "blazeangle" of the grating. The grating having blaze angle equal to 5.6°, concentrates most of the radiations around 3000 A° in the first order and the grating with blaze angle equal to 10.7° concentrates most of the radiations around 5700 A°. Gratings with blaze angles 5.6° and 10.7° were available in the laboratory. Both the gratings are having 651 grooves per mm. The grating is mounted on a rotatable table and hence it can be set for different wavelength ranges and orders of the spectrum.

The spectrograph has the following outstanding optical properties ;

(i) The slit is stigmatically imaged in a 1:1 ratio. Hence, the height of the spectrum is exactly same as the height of the slit.

(ii) The mirror system is achromatic i.e. the focussing is independent of wavelength.

(iii) The image plane is nearly flat.

(iv) The spectrum lines are not curved but they tilt as the grating is retated. The inclination of the lines can be compensated by tilting the slit in the opposite direction.

(v) The dispersion can be adopted to the problem in hand by utilizing the various orders of the grating spectrum. The reciprocal dispersions in the various orders are as follows :

Order	1	2	3	4	5	6	7	
Reciprocal dispersion	7.33	3.57	2.27	1.58	1.12	0.77	0.47	A°/mm

(vi) The spectrograph is equipped with a supplementary device that enables the rays to impinge on the grating twice. With the utilization of this "double pass" device the dispersion can be doubled. The path of rays in "double pass" is schematically shown in Fig. 5.

The outstanding quality of this instrument is its high resolving power. The theoretical resolving power is given by the formula

$$R_{Theoretical} = mN \qquad (29)$$

where m is the order of the spectrum and N the total number of grating grooves. In the grating available in this laboratory with 651 lines per mm, the theoretical first order resolving power is 45,600. The practical resolving power $\lambda/\Delta\lambda$ is somewhat less than the theoretical value. This high resolving power of the grating was great advantage in the present investigation and it helped to resolve the close structure due to the isotopic

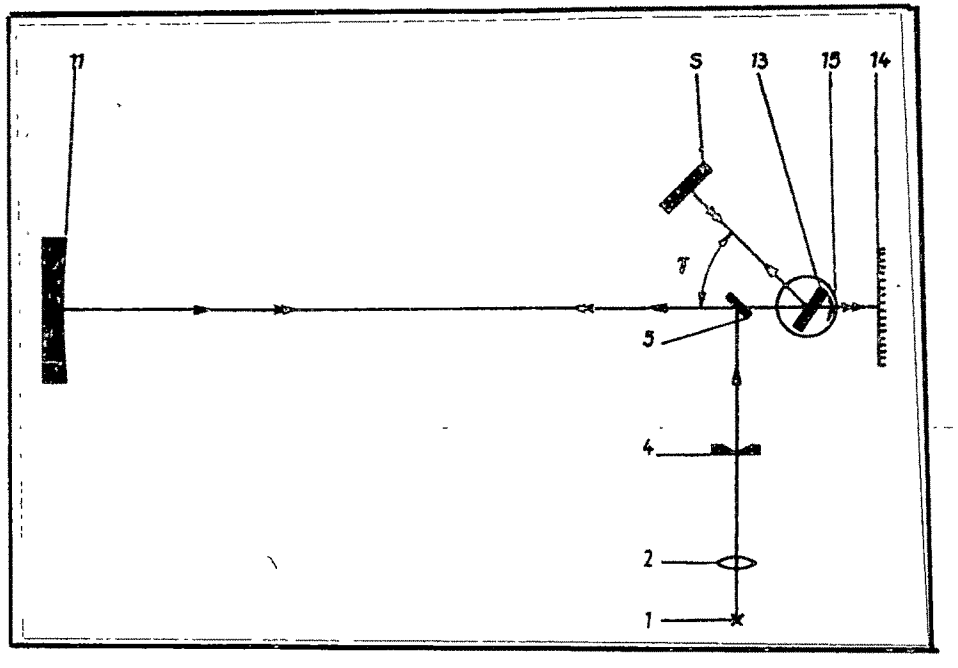

Fig. 5

Schematic representation of path of rays in double-pass beam.

1. Source
2. Collimating lens
4. Slit
5. Deflecting mirror
S. Plane mirror
11. Concave mirror
13. Plane grating
14. Plate holder
15. Grating table

effect.

While recording the spectrum appropriate filter or a pre-disperser was used to avoid the overlapping of the other different order spectra.

3.4 COMPARISON SPECTRUM AND MEASUREMENT

A comparison specfrum of iron arc running at 110 volts at 4 amperes was recorded in juxtaposition with the spectrum of the molecule under investigation. The iron spectrum is extensively used for comparison because of the convenience and simplicity associated with it in addition to the fact that it gives large number of sharp lines in the visible and ultraviolet regions of the spectrum. The iron standards adopted by International Astronomical Union 1928, 1932 and 1938 (Sawyer, 1944) were selected from Hilger Charts (Hilger and Watts, London). The M.I.T. wavelength table (Harrison, 1939) was occasionally used.

The measurements of the plates were carried

out on an Abbe Comparator having a least count of one micron.

For the wavelength determination of the grating spectra, a standard line whose wavelength λ_m was known, was selected from the reference spectrum. The wavelength of the unknown line or band head was determined by substituting in the following formula

$$\lambda_m(x) = \lambda_m(x_1) = \pm \Delta x D_m \left(\frac{x_1+x}{2}\right) \tag{30}$$

where $\Delta x = x_1 - x$, the distance between the known line $\lambda_m(x_1)$ and the unknown line $\lambda_m(x)$ and $D_m(\frac{x_1+x}{2})$, the reciprocal linear dispersion mid-way between the two lines. This formula is accurate for a distance $\Delta x \simeq 20$ mm and correction was applied for larger distances.