CHAPTER: 2

EXPERIMENTAL TECHNIQUES

During this thesis work, various techniques were employed in the investigation that was described briefly here together with some alternative supporting techniques. These techniques include Bridgman-Stockbarger [1] crystal growth method, X-ray diffraction, preparation of thin films and measurement techniques of optical and electrical properties, surface observation etc.

I. TECHNIQUES FOR CRYSTAL GROWTH

1.1 Vacuum Sealing Unit:

Before synthesizing the compound, one needs to weigh the material in a proper stoichiometric amount. With a semi microbalance, In-Sb-Bi weighed correctly up to 10 µg. After weighing the substance, it was placed in an appropriate quartz ampoule. This ampoule was then vacuum sealed using vacuum sealing unit at a pressure of~ 10^{-5} Pa. The instruments that were used in the present work are shown in figure-1 and figure-2.

1.2 Synthesizing the compound:

A melt-stirring procedure was employed to achieve a homogenous mixture of the weighed quantities of alloy components. It consists of a resistance furnace with a cylindrical core of about 45 cm in length and 5 cm in diameter. A ceramic tube of 60 cm in length and 1.5 cm in diameter is passed through the cylindrical core. A uniform temperature zone and sufficient length, depending on the maximum temperature in the furnace, is obtained inside this tube. The two ends of the tube were fitted in to two brass sockets. The sockets are pivoted on frictionless bearing for smooth motion without wobbling. The tube is rotated at 10 rpm by an electrical motor. A photograph of the mixing unit is shown in figure-3. A quartz ampoule carrying the charge and evacuated to roughly 10^{-4} Pa pressure is sealed and put into the ceramic tube for melting and stirring the charge. The maximum temperature inside the furnace core is kept about 100°C above the melting point of the material. The temperature is measured and controlled (within $\pm$5°C) with a proportional temperature controller. The temperature is sensed with a chrome-alumel thermocouple. The molten charge is stirred by the rotational cum rocking of the

quartz tube. This treatment is continued for 2 to 3 days to ensure thorough mixing and reaction of the charge. After that, the molten charge is cooled to room temperature.

Figure-1 Weighing Machine

Figure-2 Vacuum Sealing Unit

1.3 Crystal growth:

Crystal growth is a complex process which usually takes place by a phase change, and it can broadly be categorized as follows:

1. Solid state growth: Solid-Solid phase transition.
2. Melt growth: Liquid-Solid phase transition
3. Vapour growth: Vapour-solid phase transition.

Crystallization from melt is the most widely used method for crystal growth, mainly due to the higher growth rates obtainable and because it is easily susceptible to modifications. Also chances of chemical contamination are reduced as compared to the other methods. All the basic techniques were variants in the way materials can be crystallized in rods, crucibles, boats or tubes. Thus, the Czochraslki technique involves controlled crystallization from a crucible by pulling the melt whereas the Kyropoulos technique does not involve pulling but crystallization onto a seed-crystal in a crucible. Zone melting is the generic term for a series of techniques in which a molten zone (or zones) is formed and traversed along a bar so as to produce progressive melting and freezing. The horizontal Bridgman method involves the progressive crystallization of molten material in a boat or tube whilst the Stockbarger (vertical Bridgman) technique is the vertical equivalent of the lateral process [2].

1.3.1 Bridgman–Stockbarger method:

Bridgman-Stockbarger technique can produce large size crystal from thin rods to ingots of several centimeters in diameter. The Bridgman crucible is usually a tube of circular cross section with a tapered shape formed at one of the ends. The tapered end leads through the negative temperature gradient, thereby effecting the charge transform from liquid to solid state and it provides conditions for single nucleation event required to grow subsequently as a single grain through the rest of the material as it solidifies. The Stockbarger-Bridgman vertical furnace is divided into two halves, the temperature of which can be varied independently and hence in order to obtain a suitable gradient. The apparatus consists of a vertical resistance furnace having a cylindrical core 55 cm in length and 5 cm in diameter, prepared in the usual way. It is properly lagged to avoid radiation losses. The temperature of the furnace is controlled ($\pm$5°C) using achromel-alumel thermocouple and a temperature controller. The temperature gradient in the

furnace in the region of interest, viz, the lower end where through the molten charge is lowered for unidirectional solidification, could be varied in the range from about 35°C/cm to 45°C/cm. The ampoule containing the charge is sealed at 10^{-4} Pa pressure and is kept at the center of the furnace. The central temperature is maintained 50°C above the melting point for a sufficient time to melt the complete charge and then it was lowered down the furnace. The lowering is facilitated by a gear mechanism coupled with a 0.5 H.P. motor. The lowering speed could be varied from0.35cm/hr to 1.0 cm/hr by changing the output shaft of the gears. A photograph of the unit is shown in figure-4. The detailed growth of$InSb_{1-x}Bi_x$ single crystal by this method is described in chapter 3.

Figure-3 Alloy mixing unit

The single crystalline character as grown was asserted by

(1) Cleavage test and (2) Etching test.

The smoothness and hence the perfection of cleavage plane depends on the quality of the crystal grown. This can further be confirmed by etching the surface in a dislocation etchant and examining the distribution and shape of each pit.

II. THIN FILMS:

Modern day technology requires several types of thin films for variety of applications. The films can be single or multilayer coatings on suitable substrates of different shape and sizes. The basic steps involved in a thin films' deposition technique is:

(a) Creation of material to be deposited in an atomic, molecular or particulate form prior to deposition.

(b) Transport of material to the substrate in the form of a vapor stream, spray etc.

(c) Deposition of the material on the substrate and film growth by nucleation and growth process.

Thin films deposition technique has been broadly classified into four main categories:

1. Physical vapor deposition (PVD).

2. Chemical Vapor deposition (CVD).

3.Electroless or solution growth deposition.

4. Electro Chemical deposition (ECD).

Figure-4 Bridgman-Stockbarger technique

By combining PVD and CVD, hybrid technique such as reactive evaporation/sputtering and plasma deposition has also been developed. The PVD technique has been used in this investigation. PVD technique is further classified into:

(i) Molecular Beam Epitaxy (MBE)

(ii) Activated Reactive evaporation (ARE)

(iii) Thermal Evaporation

(iv) Electron Beam Evaporation

(v) Ion plating.

2.1 Thermal evaporation:

It is one of the well-known PVD techniques and the most widely used one. Large variety of materials (metals and semiconductors) can be evaporated and deposited on different substrates. In the thermal evaporation, the material is created in a vapor form by means of resistive or RF heating. On heating a material in vacuum, it evaporates at a rate given by the well-known Langmuir-Dushman equation. The evaporated atoms are transported through vacuum and get deposited on the substrate. Only at pressure $\leq 10^{-4}$ Pa, the mean free path of molecules becomes large so that the vapor beam reaches the substrate nearly un-scattered.

A variety of sources are used to evaporate material, depending on whether the materials are in wire, foil, ingot or powdered form. The material used as a resistive source of heat is a refractory metal like W, Mo etc. One can evaporate from two or more sources in order to deposit a multilayer film of an alloy/compound. Direct thermal evaporation of intermetallic compounds may pose some practical difficulties. These compounds cannot be deposited without due consideration of their dissociation which may take place even below their melting points in some cases. There may arise difficulties in growing the films of required stoichiometric composition from alloys and complex chemical compounds. The adhesion of film to substrate depends on the level of purity of the substrate surface, procedure of its cleaning and film deposition condition.

In order to overcome various difficulties, the technique known as flash evaporation may be used. It is generally used for deposition of materials whose constituents have vastly differing vapor pressures and which are known to decompose easily on vaporization. It is applicable to certain alloys, metal-dielectric mixture and compounds. Most of the time, vapors impinging on the substrate are extremely supersaturated, therefore condensation coefficients have no effect on the film composition. In this technique, a fine powder of the compound is sprinkled over a heated sheet/boat, which is at a high temperature as compared to the melting point of the compound, to produce an instantaneous and complete evaporation of the compound. The powder is kept in a feeder which is electromagnetically vibrated to drop it slowly on the preheated boat.

2.2 Electron Beam Evaporation:

The temperature of the evaporated material can also be raised by electron bombardment instead of resistive heating. The thermionic electrons are accelerated and focused on the material

at a voltage of 5 to 10 kV. The electrons lose their kinetic energy mostly as heat energy and the temperature at the focal point may be raised up to about 3000 °C. At such a high temperature, most of the refractory metals and compounds can be evaporated. The temperature at the focused point is very high, while rest of the material remains cool. The result is lesser interaction between the material leads to reduced contamination. Evaporation rate can be varied by changing the input power.

2.3 Molecular Beam Epitaxy (MBE):

The deposition of single crystalline(epitaxial) films by the condensation of the one or more beams of atoms and/or molecules from Knudsen(effusion) source, under UHV conditions, is called molecular beam epitaxy. Epitaxial films of compound semiconductor like GaAs, CdTe, etc. are usually deposited by this technique. The technique achieves precisely controlled properties of the film. The growth temperature is low, which minimizes the thermal effects like diffusion. The growth rate is also small (1 to 10 Å / sec).

2.4 Activated Reactive Evaporation:

If the evaporated material (by resistive heating or electron beam evaporation) is transported through a reactive gas plasma (oxygen, acetylene etc.), the deposition technique is known as activated reactive evaporation. It is used to deposit highly adherent films of oxides and carbides.

2.5 Ion Plating:

In this process, the substrate and film are exposed to a flux of high energy ions during the deposition. The energy of the ion is high enough to cause the changes in the interfacial region and film properties such as adhesion of the film, its morphology and density. The evaporation of materials done by resistive heating or electron beam bombardment. A plasma is created in the working gas like argon either by keeping the substrate at high negative potential or by electron emitted from a hot filament and accelerated to an anode. The negative potential at the substrate accelerates the ions to a desired energy [3]. In the present work the thermal evaporation technique has been used to grow thin films of $InSb_{1-x}Bi_x$.

III. EXPERIMENTAL SET UP FOR THIN FILM GROWTH

3.1 Vacuum Coating system:

In the present work, the thin film deposition has been done using a “Hind Hivac" advanced coating system (Box Type High Vacuum Coating Unit Model BC-300 (figure-5) [4]. The chamber material is made of polished stainless steel with vacuum sealed glass windows for visual inspection of the coating process. The system consists of a double stage gas ballast rotary pump having a capacity of 200 lit./min. and an oil diffusion pump (DP) OD-114 having oil charge of 150 to200 cc. Rotary pump relates to a moisture trap mounted directly above the inlet of the pump. A tray containing the desiccant in the form of pellets (usually activated alumina) is kept inside the trap body. The gases passing through this trap comes in contact with the desiccant which absorbs the water vapor present in the gas. This avoids combination of the rotary pump oil with water and other harmful vapors.

To isolate the vacuum chamber from the pump it is provided with a solenoid value to admit the air automatically into the rotary pump either on switching off the system or on the failure of electric power supply, thus giving a complete protection against the oil being sucked back.

To avoid the back streaming and hence contamination and loss of pump fluid, the DP relates to water-cooled baffle value which enables a working vapor pump to be isolated while pumping system is at atmospheric pressure a liquid nitrogen trap is also connected with the DP to avoid the back streaming and increase the action of DP. The L.T. supply for filaments or boats is obtained from a 230V input transformer by means of series or parallel connections in the secondary of the transformer. The L. T. output of the transformer is

Figure-5 Thin-film coating unit

fed through a current meter and a sector switch to L.T. leads and filament holder. It is also provided with H.T. power supply for glow discharge cleaning (ion bombardment), obtained from a high reactance transformer rated at 3.5 kV,50mA and 5 kV AC open circuit. A solid-state power pack having a DC output is provided for H.T. cleaning and cathode sputtering supply.

Fully stabilized vacuum gauges are provided: Two Pirani gauge heads, one of which is mounted on the mouth of the rotary pump and the other in the chamber which can measure from 5 Pa to 10^{-2} Pa and a penning gauge fitted with the chamber and measuring from 10^{-1} Pa to 10^{-5} Pa.

3.2 Chamber arrangement:

The chamber gadgetry comprises of a work holder ring which has a useful diameter of about 8 inches. It is supported by three pillars fitted to the base plate. A D.C. high tension discharge cleaning system consisting of a pure aluminum annular ring suitably shielded to avoid electron contamination of the work. A source shutter swinging over the source position and operated by an external lever is provided on the front of the cabinet.

A standard filament holder is fitted to the L.T. live electrodes and an earth electrode. The filament is normally positioned vertically below the center of the work holder to give nearly uniform distribution of the vapors. For deposition of a multilayer film, it is provided with a multifilament turret designed to evaporate four different materials without breaking the vacuum. The turret is rotated by external hand wheel.

The rotary is useful for the uniform deposition of the materials on large plane surfaces. This consists of a holder of 6 inches in diameter and is rotated by a variable speed electric motor situated outside the chamber, without vibrations. The speed is controlled by a solid-state speed control.

IV. THICKNESS MEASUREMENT:

Thickness is the most significant film parameter. It can be determined by monitoring the rate of deposition in real time or after the film has been removed from the deposition chamber. Usually, the multiple beam interferometry method has been used [5]. Two reflecting surfaces are brought close together in the latter situation, forming a tiny wedge with a little air gap between them. If a monochromatic light is now focused on them at normal incidence, light interference will occur because of interactions between numerous reflected beams in the air gap, resulting in a series of fringes (Fizeau) seen in the back reflected light. The spacing between the fringes or lines is determined by the air gap as well as the monochromatic light's wavelength. For the multiple beam interferometric method of film thickness measuring, this principle is applied and appropriately adjusted.

A film with a predetermined thickness is deposited over a flat surface, leaving a sharp edge between the film and the substrate's uncoated region. This can be accomplished with an

optical flat substrate and an excellent microscopic glass slide. The film-coated substrate is then given a heavy and highly reflective metal coating, such as silver or aluminum, to generate a sharp step on the film edge. The reference plate, which is a flat (optically) glass slide with a partially transparent film of the same metal, is then placed over the specimen with their metal coated surfaces in touch, leaving a minimal air gap at the step. A monochromatic parallel beam of light is incident on the two-plate assembly after passing via a beam splitter or a glass plate slanted at 45°, and the reflected light is examined through a microscope (figure-5a). Figure-5b shows a set of sharp fringes perpendicular to the step with identical displacements, and the thickness (t) may be calculated using the equation below [6].

$$\text{Thickness of thin film } t = \frac{b\lambda}{2a}$$

where,

b = Displacement of the fringes at the step

a = Distance between consecutive fringes and

λ= Wave length of light used =5890Å (Sodium Vapour Lamp)

These fringe displacements, which seem as parallel lines, however, occur near the film edge. The sharpness of fringes depends on the reflectivity of the metal coating, the spread of the incident beam, air gap etc. It is also essential that the metal coating on the two plates, viz., the substrate and the reference plate should be of the same material since a phase change occurs when a beam of light is incident on each of the metal coating. This technique is capable of resolution as low as about 10 Å. This is one of the simplest methods which can be adopted for the measurement of the thickness that varies from 30-20,000 Å. This is the only property–independent method for thickness measurement.

In the present work, the thin films of $InSb_{1-x}Bi_x$ (x= 0, 0.3,0.4,0.5) different thicknesses were deposited on glass substrate at10^{-5} Pa pressure. The thicknesses of these films were measured by quartz crystal monitor.

V. OPTICAL MICROSCOPY:

Vickers Microscope:

The micro photographical study of the crystal surface was carried out using the Vickers projection microscope. It is an inverted metallurgical type optical microscope. This microscope carries two different systems for the examination of the crystals. The present work involves optically opaque crystals and only the reflection system was used for the purpose. This equipment is also used for phase contrast and light profile technique.

VI. X-RAY DIFFRACTION ANALYSIS:

Among the various characterization, X-Ray diffractometer technique play a very important role in structural characterization. This technique is used for a micro structural investigation of thin films and bulk crystals. The technique based on the use of monochromatic radiation yield quantitively structural and symmetry properties possessed by the material under investigation. In the present study the X-ray diffractometer BRUKER D8 Advance model (figure-6) was used for $InSb_{1-x}Bi_x$ (x= 0, 0.3,0.4,0.5) crystals and thin films. It was operated with $CuK\alpha_1$ (λ = 1.54056 Å) radiation in the 2θ range of 10° to 80°.

The obtained XRPD results are partly used as phase characterization tool. This diffraction method is use due to its ability to differentiate between phases within identical chemical compositions having different polymorphs. Final data from XRPD can be represented as a function of intensity vs interplanar distance or diffraction angle. Using the diffraction pattern one can find the phase present in the grown sample. The measured data can be validated using the JCPDF international center of diffraction data [7].

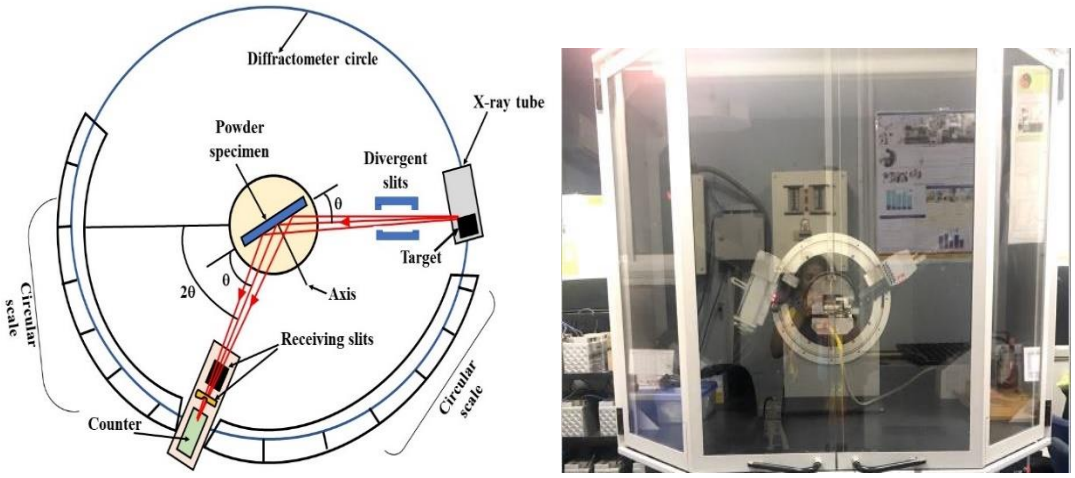

Figure-6 Schematic diagram of Powder X-ray Diffractometer and BRUKER D8 Advance model X-ray diffractometer

VII. ENERGY DISPERSIVE ANALYSIS BY X- RAYS (EDAX).

EDAX technique works on the concept of X-ray production by elements. Electron beam is imparted on specimen surface under investigation. The characteristic rays produced are analyzed as a function of energy, and the data obtained for the particular specimen helps to understand the elemental percentage in the composition. EDAX and SEM are usually available in one setup because the use electron beams as a source commonly (figure-7). EDAX data and elemental mapping for the grown $InSb_{1-x}Bi_x$ (x= 0, 0.3, 0.4, 0.5) crystals were carried out and discussed in chapter 3.

VIII. MICROHARDNESS MEASUREMENT TECHNIQUE:

Hardness can be measured by various methods as mentioned below:

1) Scratch method

2) Abrasive method

3) Plowing method

4) Rebound method

5) Damping method

6) Cutting method

7) Erosion method and

8) Static indentation method

Figure-7 Scanning Electron Microscope and EDAX System Setup

A brief description of these methods follows:

1. Scratch Method:

In 1822, Friedrich Mohs had developed this method which is widely used by mineralogists. In this method, ability of one material to scratch another is termed as the hardness of scratched material with respect to the other. If the hardness is greater than 4, Mohs method is not suitable.

2. Abrasive Method:

In this method, the measure of resistance to mechanical wear is taken to be the amount of material removed from the surface under specific conditions. The hardness of the specimen is determined by loading it against a rotating disc and measuring the rate of wear.

3. Plowing Method:

A blunt element (typically diamond) is pushed across a surface under precise stress and geometrical conditions. The hardness is determined by the width of the groove formed and such type of test Beerbohm test uses.

4. Rebound Method:

Typically, a steel ball of standard mass and dimensions is bounded from the test surface, and the height of rebound is used to determine hardness. The shore scleroscope is a hardness tester of this type.

5. Damping Method:

In this method, the change in amplitude of a pendulum with a hard pivot on the test surface is utilised to measure hardness.

6. Cutting Method:

In order to remove a chip of standard dimension from the specimen, a sharp tool of definite geometry is used.

7. Erosion Method:

Under regulated conditions, abrasive grains or sand are projected onto the test surface, and the amount of material lost in a certain time is used to calculate hardness in this technique.

8. Static Indentation Method:

A steel hall, a pyramid, or a cone (indentor) is driven into the surface in this approach, and the load per unit area of the permanent impression made is used to determine hardness. This category includes the Brinell Vickers, Rockwell, pin indentation, and knoop tests.

The most popular and simplest method of hardness measurement is the static indentation hardness method.

VICKERS DIAMOND INDENTOR:

The Vickers diamond indenter is in the form of a square based pyramid with apex angle = 68°. It was used to measure the microhardness of the grown single crystals by producing indentation marks on the cleaved surface of the specimens, under known applied loads, loading time, temperature etc. Its main characteristic is the geometrically similar impressions obtained.

The Vickers hardness, H_v, was calculated using the formula,

$$H_v = \frac{1854 \times P}{d^2}\ \text{Kg/mm}^2 = \frac{1854 \times P}{d^2} \times 9.8\text{MPa}$$

in accordance with the definition given by Cooke, Thoughton at al [8], where P is load in gram and d is the average diagonal length of indentation mark in microns. To measure the diagonal of the indentation mark, a micrometer eye piece with the least count 0.19 microns was used.

The Vickers Microhardness Tester (supplied by M/s. Cooke Thoughton and Simms Ltd., England) was used with the Vickers projection microscope (figure–8). All the instructions suggested by the supplier were rigidly observed. Since there is no provision for making indentation at high temperature in the above equipment, a special arrangement described below was attached to the hardness testing apparatus.

A cylindrical shape refractory block was used to mount the specimen, the diameter and length of this block being such that it can easily be fitted in the collect of hardness testing unit of the microscope. A small heating element was passed through this mount. A circular brass disc of the same diameter as of the mount was fitted on top of this mount. The specimen can be fitted on the disc by a proper adhesive. A copper constantan thermocouple was placed through a groove 1mm below the top of the brass disc.

Figure-8 Vickers projection microscope

Known melting points of some substance like paraffin wax, InBi, Tin etc., were checked to calibrate this heating arrangement. The error in any case did not exceed 2 °C. Before indenting the specimen, care was taken to get the thermal equilibrium. The detailed study of hardness of $InSb_{1-x}Bi_x$ (x= 0, 0.3, 0.4,0.5) crystals at room temperature and at higher temperatures is presented in Chapter 4.

IX. ELECTRICAL PROPERTIES:

9.1 Hall measurement:

For Hall measurement, linear probe geometry is used. Change carriers contributing the current caused by an applied electric field are deflected by a magnetic field applied perpendicular to the current. The resulting Hall voltage normal both to the current and the field can be measured. The sample is kept between the two poles of a strong electromagnet (figure-9) capable of magnetic field of the order of 18 kilo gauss. A sensitive current meter is connected in series with a stabilized DC power supply and the sample. Across the other two contacts, digital micro voltmeter is connected. Current and voltage are measured in absence and presence of the magnetic field. For both the measurement, the electrodes should be ohmic.

9.2 Thermoelectric power measurements:

For the measurement of Seebeck coefficients [thermoelectric power (TEP)] as a function of temperature, a “Differential Temperature controller" developed by Scientific Solutions, Bombay was used. Schematic diagram of the sample holder was shown in figure-10. The thermopower measurement system, TPSS-200 is a versatile, low cost, specially developed integrated system for measurement of the thermo e.m.f generated by the “Sample–stainless steel probe couple” in presence of a temperature gradient. The two matched main heaters mounted along the axis of the two sample holder shafts provide the controlled base temperature from 300 to 500K. The auxiliary heaters wound on each of the sample holder shafts enable to provide the required gradient up to $\pm$10 K. The sign ofthe gradient can be changed by selecting one of the auxiliary heater coils.

The operation of the system can be understood from figure-11which is based on the principle of AC power control using controlled rectifiers. Using triacs as the power control

device the power to the heater and hence the temperature can be controlled. An error signal proportional to the difference of the measured and the set temperature along with external bias is used to decide the firing angle of the triac hence controlling the temperature.

Figure-9 Electromagnet assembly

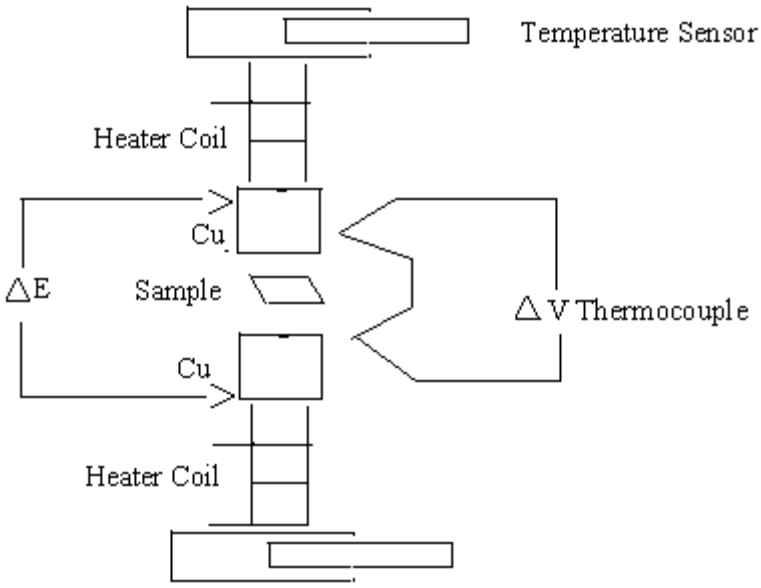

Figure-10 Schematic diagram of the sample holder for TEP.

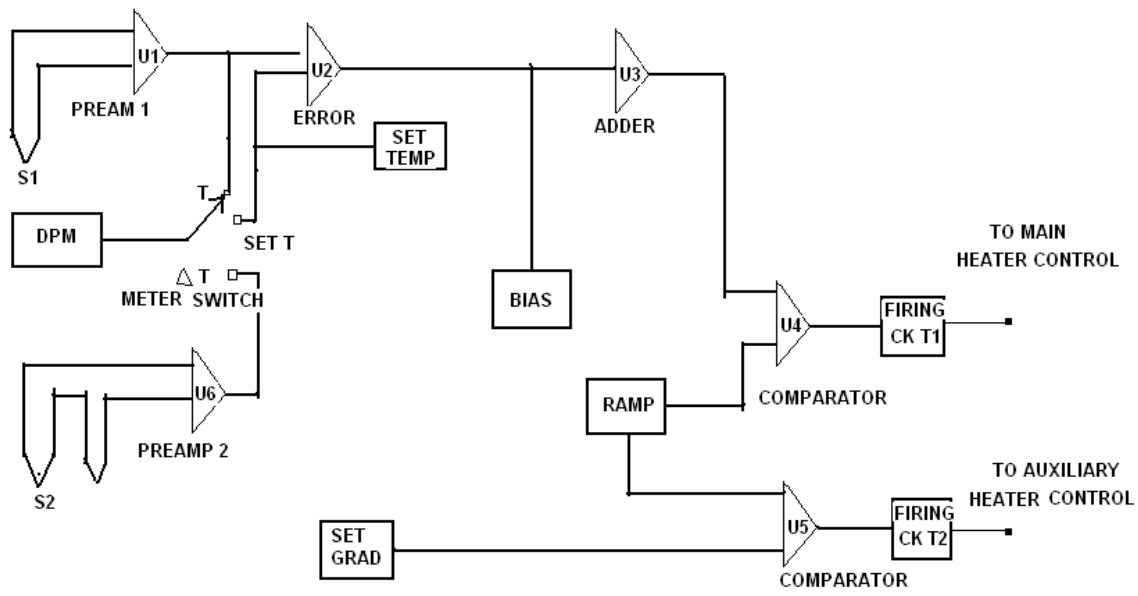

Figure-11 Operation of the DTC system

The output of the sensor mounted on the main heater is amplified by the preamplifier UI to get the voltage proportional to the temperature reading which is displayed as T. The same signal is also fed to the error amplifier U2 which compares this signal with the set temperature obtained from a stable reference source. The gain of the error amplifier controls the proportional band of the control and was preset to about 30% of the full-scale.

The error amplifier output is then summed with a bias signal from the bias control in the summing amplifier U3, the output of which is the voltage proportional to the temperature difference. The dc control signal is then compared to a linear ramp of 0-3 V (0to full power) in the comparator U4. The output of the comparator which controls the firing angle of the triac is then given to the firing circuits. A similar low power control circuit is used to control the power to auxiliary circuits. Preamplifier U5 amplifies the output of the differential thermocouple for the indication of T which is the temperature gradient.

X. MEASUREMENT OF OPTICAL PROPERTIES:

The I. R. Spectrophotometer of JASCO (Japan) MODEL-4100 (figure–12) was used for measurement of transmittance of the samples, in the wave number range 400 cm^{-1} to 4000 cm^{-1}. In the case of crystal, fine crystalline powder was thoroughly mixed with spectroscopic grade dry KBr powder at a concentration of less than 5%, and the mixture was vacuum palletized into a palette with a diameter of about 1 cm, as illustrated in figure-13. Whereas, in the case of thin films, the films deposited on NaCl crystal substrates were used. The instrument acquires an interferogram and transforms it into a spectrum in terms of wave number. The wave number resolution of the instrument is 4 cm^{-1}. It uses glow bar IR source and DTGS detector [9].

XI. PHOTORESPONSE MEASUREMENTS:

Photoresponse measurement is usually carried out in dark. For illuminating the sample, a light source (like a halogen lamp) is used. The thin films were grown on glass substrate, and contacts were taken using copper wire and highly conductive silver paste as a bonding agent. To study the photo-response of the films, two contacts were taken on the same side of the films. The devices were then left over-night under a tungsten filament lamp for drying of the silver paste. These devices were then mounted on sample holder attached to photo-response of devices was recorded using Keithley-2400 SMU (figure-14) at room temperature [10]. The photo-response study of the$InSb_{1-x}Bi_x$ (x= 0, 0.3,0.4,0.5) was then further carried out under illumination of monochromatic LED of wavelength 670 nm (red) of incident intensity of 100 mW.

Figure-12 I. R. Spectrophotometer of JASCO (Japan) MODEL-4100

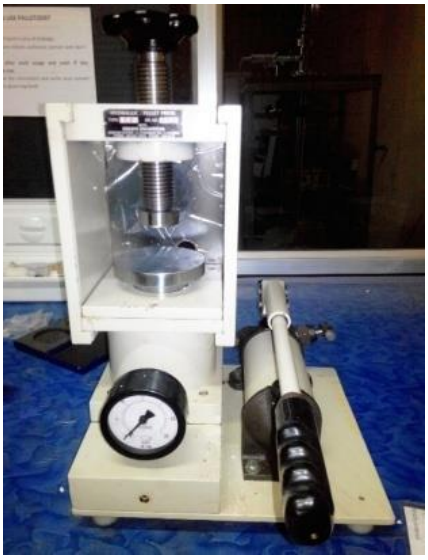

Figure-13 The vacuum palettizer

Figure-14 Keithley-2400 SMU

References:

[1] P. W. Bridgman, Proc. Am. Acad. Arts: Science, 60 303 (1925).

[2] R. Ueda and J. B. Mullin: Crystal growth and characterization north Holland publishing company, New York (1975).

[3] K. L. Chopra and L. K. Malhotra: Thin film technology and applications, Tata McGraw-Hill publishing Co. Ltd., New Delhi (1985).

[4] Instruction Manual, Vacuum Coating Unit, BC-300, Hind High Vacuum Co. (P) Ltd., Bangalore

[5] S. Tolansky, Multiple beam interferometry of surface and films (Oxford University Press, UK) (1948).

[6] A. Goswami, Thin Film Fundamentals, New age international publishers, London, 42 (1996).

[7] Joint Committee on Powder Diffraction Standards (JCPDS), International Centre for Diffraction Data, Swarthmore, PA.

[8] Cooke Toughton and Simms, Photomicrography, 146 NY (England) (1956).

[9] Instruction Manual, JASCO (Japan) MODEL-4100.

[10] Instruction Manual, Keithley-2400 SMU.